MACHINES

ASC & ARS SINGLE DRUM ROLLERS

ASC & ARS SERIES SOIL COMPACTORS

AMMANN

YOUR BENEFITS AT A GLANCE

WHAT CHARACTERISES THE SINGLE DRUM ROLLERS FROM AMMANN?

PRODUCTIVITY

High compaction output
Faster compaction of thicker layers with less passes

No rear axle concept
Compact machine design for high stability, manouverability and access

ACE^{pro}/ACE^{force}
Intelligent compaction tools for best effectivity

ERGONOMICS

Cab design
Spacious cab with low noise levels for Operator comfort

Simple and reliable dashboard
Intuitive machine control even with unskilled Operator

Visibility
Perfect all-around machine visibility for higher safety on the job-site

SERVICEABILITY

Tiltable cabin and engine hood
Perfect access to service points

Ground access to service and maintenance points
Easy access to service points without additional tools

Maintenance friendly design
Easy and fast daily maintenance

ASC & ARS SOIL COMPACTORS

SMOOTH DRUM

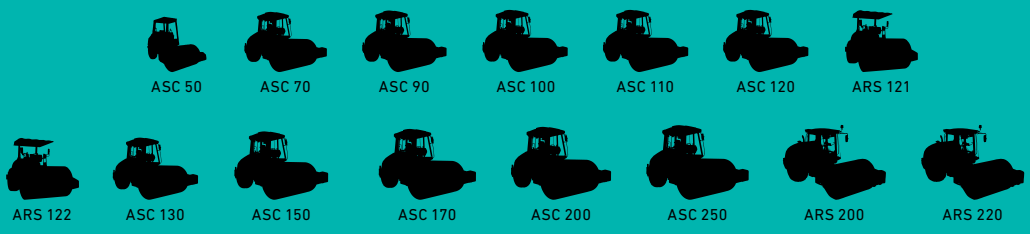

PADFOOT DRUM

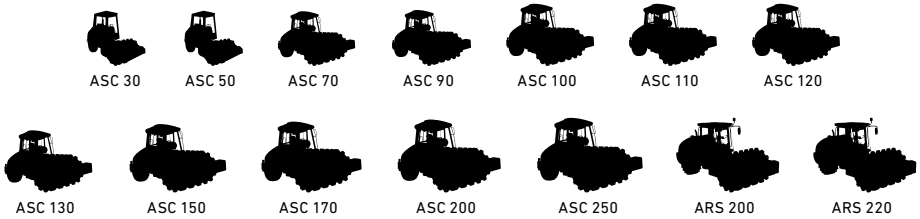

“Built for traction
and efficiency.”
AMMANN

ELIMINATE PASSES

Compaction is about reaching your goals in the fewest passes possible. Ammann soil and asphalt compactors provide that needed efficiency through industry-leading technology and an ability to direct more force toward the target and away from the machine. The result: quality results in fewer passes and a more productive and profitable jobsite.

INTRODUCTION

- The family of single drum rollers follows the latest solid power design and provides excellent operator comfort and unique compaction output and productivity.
- The line consists of machines ranging from 3 t to 25 t and utilising the latest Cummins and Deutz Tier 4i/EU Stage 3B or Tier 3/EU Stage 3A engines or Tier 4f/EU Stage 4.

COMPACTION OUTPUT

MEETING AND MEASURING GOALS

All Ammann rollers feature vibratory and amplitude systems that help you quickly reach compaction targets. Optional Intelligent Compaction systems can provide even more efficiencies.

ASC 30 & ASC 50 VIBRATORY SYSTEMS

- Single-amplitude system for ASC 30 and double-amplitude system for ASC 50 HD
- PD drum as standard for ASC 30 and option for ASC 50
- Smooth shell Kit optionally available for ASC 30 and ASC 50

ASC 50 HD–ASC 250 VIBRATORY SYSTEMS

- High compaction performance and quality
- Heavy-duty 2-stage vibrator
- Simple system for adjusting amplitude/frequency by selection of vibratory shaft rotation direction
- Multiple amplitudes and frequencies available with ACE^{pro}

YOUR BENEFITS

BOOST YOUR PERFORMANCE ON ANY JOBSITE

It's hard to know what the next job will bring: clay, sand or something in between? Ammann Soil Compactors provide industry-leading compaction outputs – whatever the application. Your jobsite conditions will change, but you will always have a need for productivity and performance.

WIDE RANGE OF OPTIONS

- Available with several engine types to match your local requirements
- Additional options available that fit your specific needs

DESIGN

- Comfort built into cabs to improve operator productivity and reduce fatigue
- Optimal visibility to front, sides and rear
- Control switches located on the dashboard for convenience
- Multifunctional display provides essential engine operating information
- Low sound levels for improved comfort

HIGH COMPACTION OUTPUT

- Industry-leading compaction output
- Tried-and-tested Ammann vibratory system
- Varied vibratory and amplitude settings that drive the energy into the material and away from the operator
- Machine design to properly direct dynamic forces

INTELLIGENT COMPACTION OPTIONS

- ACE^{pro}, which provides compaction measurement, automatic control and a documentation system
- ACE^{force}, which provides compaction measurement, guiding function and a documentation system
- ADS (Ammann Documentation System), which records and evaluates all relevant compaction process data
- GPS mapping, which adds information to ACE documentation and offers a location view
- ACI^{eco} (Ammann Compaction Indicator), which measures relative compaction value and compaction progresses with every pass

COMPACTION TECHNOLOGY

- Available with proprietary Ammann Compaction Expert (ACE) systems ACE^{force}, ACE^{pro} and ACI^{eco}, depending on models
- Identifies uncompacted spots
- Displays and evaluates all measured values including load-bearing capacity of material, number of passes and frequency/amplitude values

AMMANN SOLUTION

COMPETITORS SOLUTION

NO REAR AXLE

- Features individual movement for traction
- Has low centre of gravity for high stability
- Improves manoeuvrability
- Enhances visibility and safety
- Offers easy service access

BUILT FOR VERSATILITY

ROLLERS EXCEL IN VARIED APPLICATIONS

Ammann offers many models of rollers so their varied weights and sizes can help you succeed in everything from tight spaces to wide-open jobsites. Easily adjusted amplitude and frequency bring additional versatility once your crew is rolling.

APPLICATIONS

LIGHT COMPACTOR

- Pipeline construction
- Social and industrial development areas
- Structure backfill work
- Confined work spaces
- Airport construction
- Electric cable construction
- Dumpsite construction
- Sub-base of roads

MEDIUM AND HEAVY COMPACTOR

- Motorways
- Railways
- Airfields
- Rock fill dams
- Industrial zones
- Harbours
- Residential areas

TOP LAYERS

Single Drum Rollers not used

SUB-BASES

ASC (70/90)

Gravel mixtures:
recommended lift thickness
max. 250 mm (9.84 in)

Sub-base course:
recommended lift thickness
max. 350 mm (13.8 in)

Sub-grade:
not recommended

SUB-BASES

ASC (100/110/120/130/150/70)

Gravel mixtures:
recommended lift thickness
max. 300 mm (11.8 in)

Sub-base course:
recommended lift thickness
max. 500 mm (19.7 in)

Sub-grade:
recommended lift thickness
max. 1000 mm (39,4 in)

SUB-BASES

ASC (200/250) **ARS** (200/220)

Gravel mixtures:
recommended lift thickness
max. 400 mm (15.75 in)

Sub-base course:
recommended lift thickness
max. 600 mm (23.6 in)

Sub-grade:
recommended lift thickness
max. 1700 mm (66,9 in)

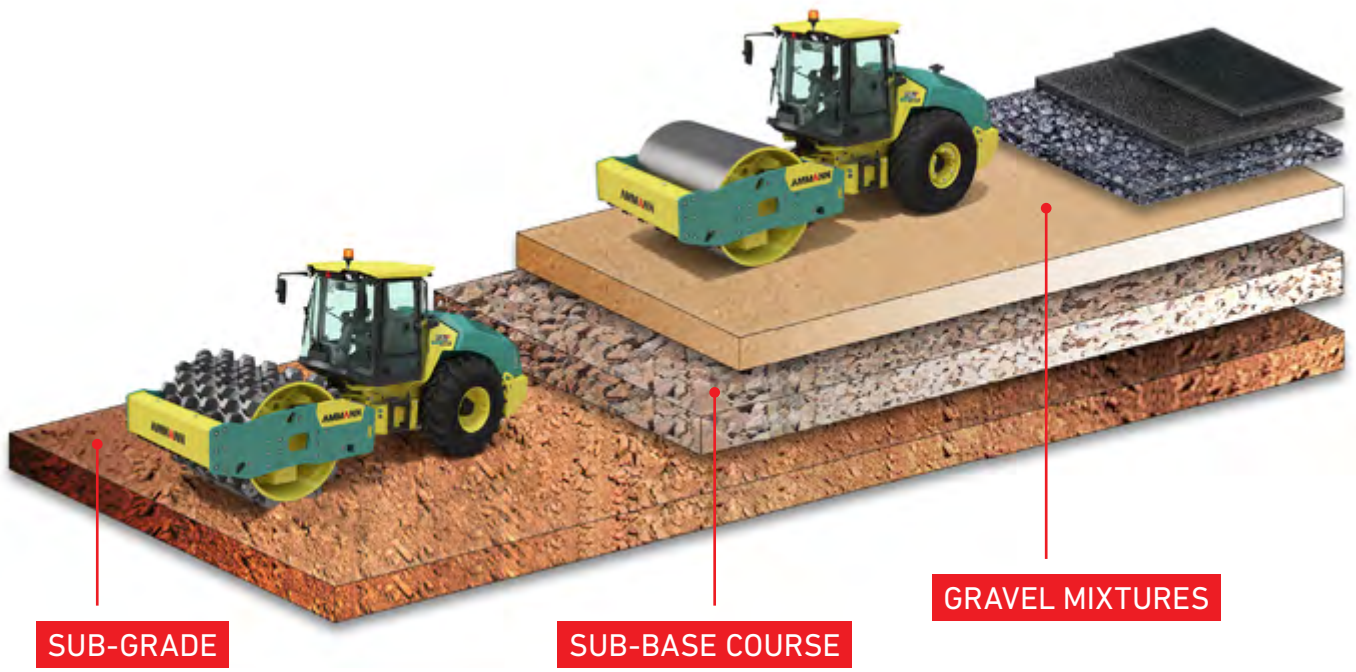

"Ammann Soil Compactors provide industry-leading compaction outputs regardless of the application."

OPERATOR COMFORT AND CONTROLS

DESIGNED FOR SUCCESS

Ammann rollers are built to keep operators comfortable, helping boost productivity throughout a long shift. This attention to design also helps operators of all experience levels succeed.

CABS AND PLATFORMS

- Spacious
- Comfortable
- Exceptional visibility
- Easy to operate
- Intuitive control and handling
- Easy-to-reach control switches

DRIVE TRAIN

Do you make a living on challenging jobsites with tough underfoot conditions and steep grades? These drive options can help.

DRIVE (D)

- For machine with smooth drum and diamond tyres
- Gradeability of 45 %

HD DRIVE (HD)

- D propulsion plus reinforced rear drive, wheel ballast and Ammann Traction Control (ATC)
- Gradeability of 50 %

HT DRIVE (HT)

- HD propulsion plus reinforced front drive
- Gradeability of 55 %

MAINTENANCE MADE EASY

MAKING THE MOST OF YOUR TIME

Extended service intervals limit the amount of routine maintenance that is required of all Ammann equipment. When it is time for preventive maintenance, service points are easy to reach – helping your crew quickly complete the work. Robust components minimise unplanned interruptions.

KEY FEATURES

- All service points reachable from ground
- E-hydraulic tilt cab and hood standard on some models
- Filling and draining points centralised for easy and fast fluid exchange
- Convenient access to all filtration elements
- Cleanable, accessible cooler

ACE
pro
RSC
AMMANN

OPTIONS

THE NEXT STEP

Finding the right roller is a great start. Next choose from a broad range of options that provide you with a machine that feels custom-made.

LIGHT COMPACTORS

- 4-way dozer blade (ASC 30)
- PD drum for ASC 50
- Smooth drum shell kit
- Open platform
- Cabin
- Backup alarm
- Beacon
- Custom color

4-way dozer blade (ASC 30)

PD drum for ASC 50

Open platform

Cabin

MEDIUM AND HEAVY COMPACTORS

- ACE^{pro}/ACE^{force}
- ACE GPS monitoring
- PD drum (or PD shell kit)
- Hardox pads for PD drum
- ATC/HD/HT versions
- ROPS/FOPS
- Cabin
- Air conditioning
- Radio with CD
- Ammann toolkit
- Dozer blade
- Road lighting
- Warning beacon
- Backup alarm
- Telematics-ready

ACE^{pro}/ACE^{force}

GPS monitoring

Dozer blade

Road lighting

Cabin

DIMENSIONS

ASC & ARS SINGLE DRUM ROLLERS

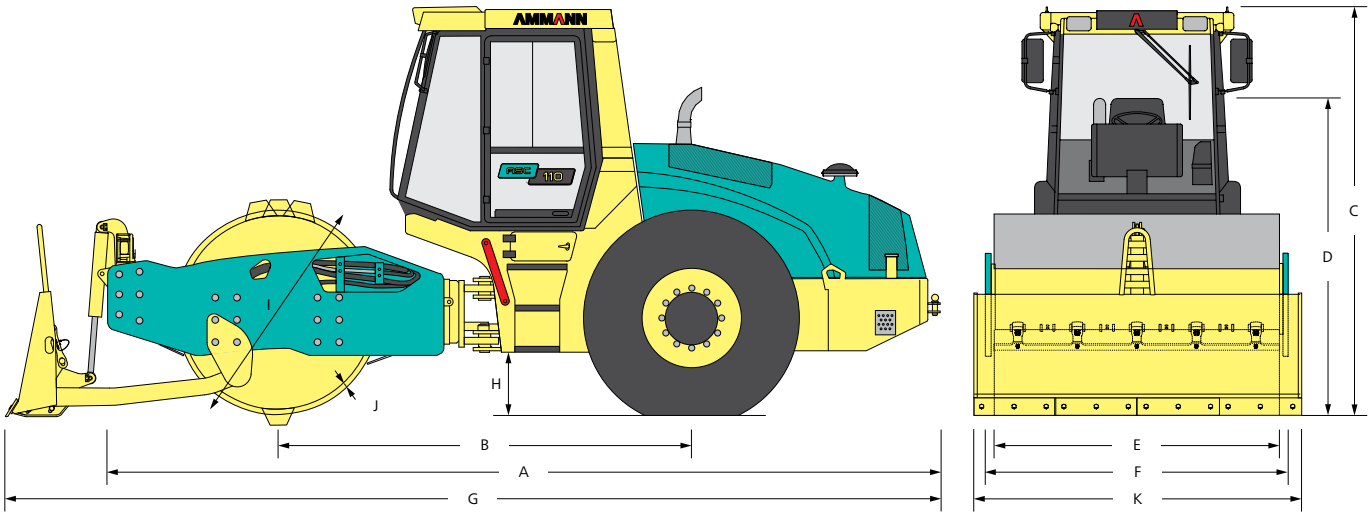

		ASC 30 Tier 4i	**ASC 50** Tier 4i	**ASC 70** Tier 3	**ASC 70** Tier 4f	**ASC 90** Tier 3
A	MACHINE LENGTH	3190 mm (125.6 in)	3920 mm (154.4 in)	5195 mm (204.6 in)	5270 mm (207.5 in)	5195 mm (204.6 in)
B	WHEELBASE	1770 mm (69.7 in)	2150 mm (84.7 in)	2560 mm (100.8 in)	2690 mm (106 in)	2560 mm (100.8 in)
C	MACHINE HEIGHT	2470 mm (97.3 in)	2440 mm (96.1 in)	2870 mm (113 in)	2870 mm (113 in)	2870 mm (113 in)
D	MACHINE HEIGHT (REMOVED CAB / ROPS)	–	–	2280 mm (89.8 in)	2280 mm (89.8 in)	2280 mm (89.8 in)
E	DRUM WIDTH	1200 mm (47.3 in)	1400 mm (55.2 in)	1680 mm (66.2 in)	1680 mm (66.2 in)	1680 mm (66.2 in)
F	MACHINE WIDTH	1330 mm (52.4 in)	1540 mm (60.7 in)	1720 mm (67.8 in)	1875 mm (73.9 in)	1720 mm (67.8 in)
G	MACHINE LENGTH (BLADE) (D/ PD VERSION)	3920 mm (154.4 in)	–	– / 5555 mm (218.8 in)	– / 5630 mm (221.7 in)	– / 5555 mm (218.8 in)
H	GROUND CLEARANCE	305 mm (12.1 in)	305 mm (12.1 in)	385 mm (15.2 in)	385 mm (15.2 in)	385 mm (15.2 in)
I	DRUM DIAMETER (D/ PD VERSIO)	– / 890 mm (35.1 in)	1104 mm (43.5 in)	1300 mm (51.2 in) / 1400 mm (55.1 in)	1300 mm (51.2 in) / 1400 mm (55.1 in)	1300 mm (51.2 in) / 1400 mm (55.1 in)
J	DRUM SHELL THICKNESS (D/ PD VERSIO)	–	–	25 mm (1 in) / 15 mm (0.6 in)	25 mm (1 in) / 15 mm (0.6 in)	25 mm (1 in) / 15 mm (0.6 in)
K	MACHINE WIDTH (BLADE) (D/ PD VERSIO)	1450 mm (57.1 in)	–	– / 2215 mm (87.3 in)	– / 2215 mm (87.3 in)	– / 2215 mm (87.3 in)

		ASC 100 Tier 1	**ASC 110** Tier 3	**ASC 110** Tier 4i	**ASC 120** Tier 1	**ASC 130** Tier 3
A	MACHINE LENGTH	5630 mm (221.7 in)	5780 mm (227.6 in)	6050 mm (238.2 in)	5630 mm (221.7 in)	5780 mm (227.6 in)
B	WHEELBASE	2820 mm (111.1 in)	2878 mm (113.4 in)	2990 mm (117.7 in)	2820 mm (111.1 in)	2878 mm (113.4 in)
C	MACHINE HEIGHT	3027 mm (119.2 in)	3070 mm (120.9 in)	3070 mm (120.9 in)	3027 mm (119.2 in)	3070 mm (120.9 in)
D	MACHINE HEIGHT (REMOVED CAB / ROPS)	2375 mm (93.6 in)	2400 mm (94.5 in)	2320 mm (91.3 in)	2375 mm (93.6 in)	2400 mm (94.5 in)
E	DRUM WIDTH	2130 mm (83.9 in)	2130 mm (83.9 in)	2130 mm (83.9 in)	2130 mm (83.9 in)	2130 mm (83.9 in)
F	MACHINE WIDTH	2250 mm (88.6 in)	2258 mm (88.9 in)	2260 mm (89 in)	2250 mm (88.6 in)	2258 mm (88.9 in)
G	MACHINE LENGTH (BLADE) (D/ PD VERSIO)	–	– /6557 mm (258.2 in)	– / 6800 mm (267.8 in)	–	– / 6557 mm (258.2 in)
H	GROUND CLEARANCE	450 mm (17.8 in)	440 mm (17.4 in)	440 mm (17.3 in)	450 mm (17.8 in)	430 mm (17 in)
I	DRUM DIAMETER (D/ PD VERSIO)	1500 mm (59.1 in) / 1640 mm (64.6 in)	1500 mm (59.1 in) / 1640 mm (64.6 in)	1500 mm (59.1 in) / 1640 mm (64.6 in)	1500 mm (59.1 in) / 1640 mm (64.6 in)	1500 mm (59.1 in) / 1640 mm (64.6 in)
J	DRUM SHELL THICKNESS (D/ PD VERSIO)	25 mm (1 in) / 20 mm (0.8 in)	25 mm (1 in) / 20 mm (0.8 in)	25 mm (1 in) / 20 mm (0.8 in)	25 mm (1 in) / 20 mm (0.8 in)	35 mm (1.4 in) / 25 mm (1 in)
K	MACHINE WIDTH (BLADE) (D/ PD VERSIO)	–	– /2441 mm (96.2 in)	– / 2441 mm (96.2 in)	–	– / 2441 mm (96.2 in)

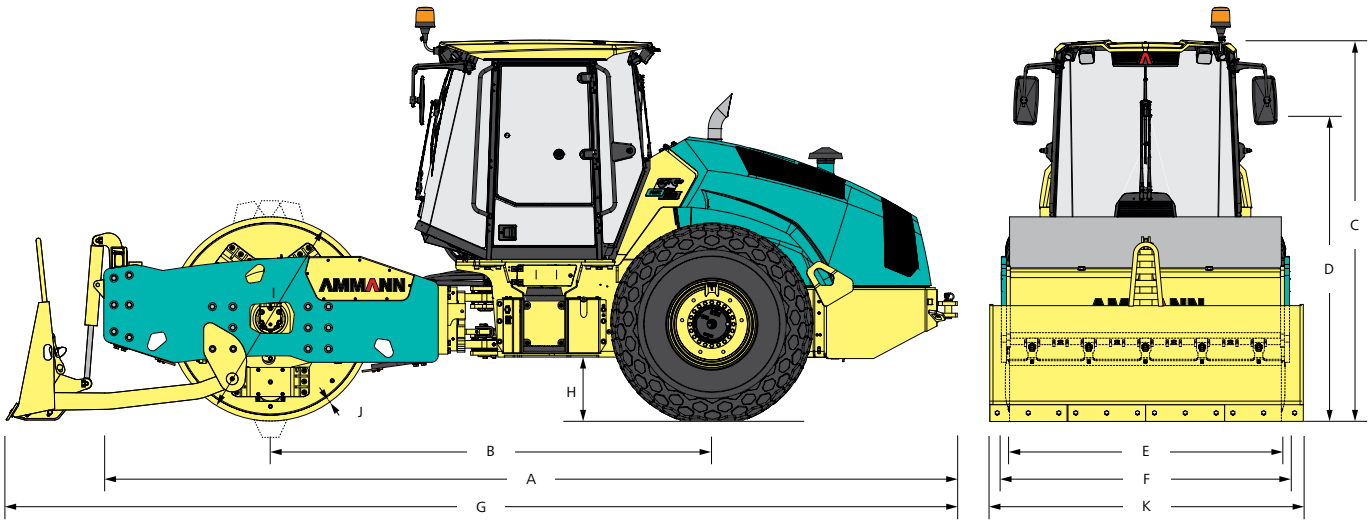

		ASC 130 Tier 4i	**ASC 150** Tier 3	**ASC 150** Tier 4i	**ASC 170** Tier 3	**ASC 170** Tier 4i
A	MACHINE LENGTH	6050 mm (238.2 in)	5900 mm (232.3 in)	6130 mm (241,3 in)	5900 mm (232.3 in)	6135 mm (241.3 in)
B	WHEELBASE	2990 mm (117.8 in)	2930 mm (115.4 in)	3050 mm (120,1 in)	2930 mm (115.4 in)	3050 mm (120.1 in)
C	MACHINE HEIGHT	3070 mm (120.9 in)	3075 mm (121.1 in)	3070 mm (120,9 in)	3075 mm (121.1 in)	3070 mm (120.9 in)
D	MACHINE HEIGHT (REMOVED CAB / ROPS)	2320 mm (91.4 in)	2420 mm (95.3 in)	2320 mm (91,3 in)	2420 mm (95.3 in)	2320 mm (91.3 in)
E	DRUM WIDTH	2130 mm (83.9 in)	2130 mm (83.8 in)	2130 mm (83,8 in)	2130 mm (83.9 in)	2130 mm (83.8 in)
F	MACHINE WIDTH	2260 mm (89 in)	2258 mm (88.9 in)	2258 mm (88,9 in)	2258 mm (88.9 in)	2258 mm (88.9 in)
G	MACHINE LENGTH (BLADE) (D/ PD VERSIO)	– / 6800 mm (267.8 in)	– / 6650 mm (261.8 in)	– / 6850 mm (269.7 in)	– /– mm (– in)	– / 6850 mm (269.7 in)
H	GROUND CLEARANCE	440 mm (17.4 in)	440 mm (17.3 in)	440 mm (17,3 in)	440 mm (17.4 in)	440 mm (17.3 in)
I	DRUM DIAMETER (D/ PD VERSIO)	1500 mm (59.1 in) / 1640 mm (64.6 in)	1500 mm (59.1 in) / 1640 mm (64.6 in)	1500 mm (59.1 in) / 1640 mm (64.6 in)	1500 mm (59.1 in) / 1640 mm (64.6 in)	1500 mm (59.1 in) / 1640 mm (64.6 in)
J	DRUM SHELL THICKNESS (D/ PD VERSIO)	35 mm (1.4 in) / 25 mm (1 in)	40 mm (1.6 in) / 28 mm (1.1 in)	40 mm (1.6 in) / 28 mm (1.1 in)	40 mm (1.6 in) / 28 mm (1.1 in)	40 mm (1.6 in) / 28 mm (1.1 in)
K	MACHINE WIDTH (BLADE) (D/ PD VERSIO)	– / 2441 mm (96.2 in)	– / 2441 mm (96.1 in)	– / 2441 mm (96.1 in)	– /– mm (– in)	– / 2441 mm (96.1 in)

		ASC 200 Tier 3	**ASC 250** Tier 3	**ARS 200** Tier 3	**ARS 200** Tier 4f	**ARS 220** Tier 3	**ARS 220** Tier 4f
A	MACHINE LENGTH	6300 mm (248.1 in)	6560 mm (258.3 in)	6688 mm (260,8 in)	6688 mm (260,8 in)	6688 mm (260,8 in)	6688 mm (260,8 in)
B	WHEELBASE	3160 mm (124.5 in)	3290 mm (129.6 in)	3460 mm (135 in)	3460 mm (135 in)	3460 mm (135 in)	3460 mm (135 in)
C	MACHINE HEIGHT	3265 mm (128.6 in)	3265 mm (128.6 in)	2985 mm (116,4 in)	2985 mm (116,4 in)	2985 mm (116,4 in)	2985 mm (116,4 in)
D	MACHINE HEIGHT (REMOVED CAB / ROPS)	2580 mm (101.6 in)	2580 mm (101.6 in)	2565 mm (100 in)	2565 mm (100 in)	2565 mm (100 in)	2565 mm (100 in)
E	DRUM WIDTH	2240 mm (88.2 in)	2240 mm (88.2 in)	2130 mm (83 in)	2130 mm (83 in)	2130 mm (83 in)	2130 mm (83 in)
F	MACHINE WIDTH	2500 mm (98.5 in)	2500 mm (98.5 in)	2258 mm (88 in)	2258 mm (88 in)	2258 mm (88 in)	2258 mm (88 in)
G	MACHINE LENGTH (BLADE) (D/ PD VERSIO)	– / 6790 mm (267.4 in)	– / 6990 mm (275.2 in)	– / 7496 mm (292,3 in)	– / 7496 mm (292,3 in)	– / 7496 mm (292,3 in)	– / 7496 mm (292,3 in)
H	GROUND CLEARANCE	500 mm (19.7 in)	500 mm (19.7 in)	500 mm (19,5 in)	500 mm (19,5 in)	500 mm (19,5 in)	500 mm (19,5 in)
I	DRUM DIAMETER (D/ PD VERSIO)	1700 mm (67 in) / 1840 mm (72.5 in)	1700 mm (67 in) / 1840 mm (72.5 in)	1600 mm (62,4 in) / 1795 mm (62,4 in)	1600 mm (62,4 in) / 1795 mm (62,4 in)	1600 mm (62,4 in) / 1795 mm (62,4 in)	1600 mm (62,4 in) / 1795 mm (62,4 in)
J	DRUM SHELL THICKNESS (D/ PD VERSIO)	45 mm (1.8 in) / 30 mm (1.2 in)	50 mm (2 in) / 30 mm (1.2 in)	45 mm (1,8 in) /30 mm (1,8 in)	45 mm (1,8 in) /30 mm (1,8 in)	45 mm (1,8 in) /30 mm (1,8 in)	45 mm (1,8 in) /30 mm (1,8 in)
K	MACHINE WIDTH (BLADE) (D/ PD VERSIO)	– / 3000 mm (118.2 in)	– / 3000 mm (118.2 in)	– / 2441 mm (95,2 in)	– / 2441 mm (95,2 in)	– / 2441 mm (95,2 in)	– / 2441 mm (95,2 in)

SPECIFICATIONS

ASC SINGLE DRUM ROLLERS
SMOOTH DRUM

		ASC 30	ASC 50	ASC 70	ASC 70	ASC 90
		Smooth drum shell kit	Tier 4i	Tier 3	Tier 4f	Tier 3
MISCELLANEOUS						
BRAKES OPERATING	–		Hydrostatic	Hydrostatic	Hydrostatic	Hydrostatic
BRAKES PARKING	–		Multiple-disc spring brake	Multiple-disc spring brake	Multiple-disc spring brake	Multiple-disc spring brake
BRAKES EMERGENCY	–		Multiple-disc spring brake	Multiple-disc spring brake	Multiple-disc spring brake	Multiple-disc spring brake
FUEL TANK CAPACITY	–		78 l (20.6 gal)	275 l (72.65 gal)	255 l (67.36 gal)	275 l (72.65 gal)
VOLTAGE	–		12 V	24 V	24 V	24 V
COMPACTION FORCES						
FREQUENCY I	–		34 Hz (2040 VPM)	30 Hz (1800 VPM)	30 Hz (1800 VPM)	30 Hz (1800 VPM)
FREQUENCY II	–		–	41 Hz (2460 VPM)	41 Hz (2460 VPM)	41 Hz (2460 VPM)
FREQUENCY ACE MIN./MAX.	–		–	–	–	–
AMPLITUDE I	–		1.8 mm (0.07 in)	1.7 mm (0.067 in)	1.7 mm (0.067 in)	1.85 mm (0.073 in)
AMPLITUDE II	–		–	0.86 mm (0.034 in)	0.86 mm (0.034 in)	0.91 mm (0.036 in)
AMPLITUDE ACE MIN./MAX.	–		–	–	–	–
CENTRIFUGAL FORCE I	–		100 kN	145 kN	145 kN	160 kN
CENTRIFUGAL FORCE II	–		–	130 kN	130 kN	145 kN
CENTRIF. FORCE ACE MIN./MAX.	–		–	–	–	–
ENGINE						
MANUFACTURER	–		Kubota V2203 M	Cummins QSB 3.3-C99	Deutz TCD3.6 L4	Cummins QSB 3.3-C99
POWER ACCORDING TO ISO 3046-1	–		35.9 kW (48 HP)	74 kW (99 HP)	55.4 kW (75 HP)	74 kW (99 HP)
MAXIMUM TORQUE	–		211/1600 Nm/rpm	412/1600 Nm/rpm	390/1300 Nm/rpm	412/1600 Nm/rpm
ENGINE COMPLIES WITH EMISSION REGULATIONS	–		EU Stage IIIA, U.S. EPA Tier 4i	EU Stage IIIA, U.S. EPA Tier 3	EU Stage IIIB, U.S. EPA Tier 4f	EU Stage IIIA, U.S. EPA Tier 3
WEIGHT & OPERATING CHARACTERISTICS						
OPERATING WEIGHT	–		4320 kg (9520 lb)	7140 kg (15 740 lb)	7240 kg (15 960 lb)	8820 kg (19 440 lb)
MAXIMUM WEIGHT	–		4350 kg (9590 lb)	9260 kg (20 410 lb)	9360 kg (20 640 lb)	10 520 kg (23 190 lb)
STATIC LINEAR LOAD	–		16.6 kg/cm (90 lb/in)	23.9 kg/cm (133.8 lb/in)	23.7 kg/cm (132.7 lb/in)	31.6 kg/cm (177 lb/in)
MAX. TRANSPORT SPEED	–		7 km/h (4.3 MPH)	11 km/h (6.8 MPH)	11.4 km/h (7.1 MPH)	11 km/h (6.84 MPH)
MAX. WORKING SPEED	–		–	4.7 km/h (2.9 MPH)	5.1 km/h (3.2 MPH)	4.7 km/h (2.92 MPH)
CLIMBING ABILITY	–		30 %	45 %	45 %	45 %
TURNING RADIUS INNER (EDGE)	–		3600 mm (141.7 in)	3090 mm (121.7 in)	3200 mm (126 in)	3090 mm (121.7 in)

ASC SINGLE DRUM ROLLERS
PADFOOT DRUM

	ASC 30	ASC 50	ASC 70	ASC 70	ASC 90
	Tier 4i	Tier 4i	Tier 3	Tier 4f	Tier 3
MISCELLANEOUS					
BRAKES OPERATING	Hydrostatic	Hydrostatic	Hydrostatic	Hydrostatic	Hydrostatic
BRAKES PARKING	Multiple-disc spring brake	Multiple-disc spring brake	Multiple-disc spring brake	Multiple-disc spring brake	Multiple-disc spring brake
BRAKES EMERGENCY	Multiple-disc spring brake	Multiple-disc spring brake	Multiple-disc spring brake	Multiple-disc spring brake	Multiple-disc spring brake
FUEL TANK CAPACITY	78 l (20.6 gal)	78 l (20.6 gal)	275 l (72.65 gal)	255 l (67.36 gal)	275 l (72.65 gal)
VOLTAGE	12 V	12 V	24 V	24 V	24 V
COMPACTION FORCES					
FREQUENCY I	–	34 Hz (2040 VPM)	30 Hz (1800 VPM)	30 Hz (1800 VPM)	30 Hz (1800 VPM)
FREQUENCY II	36 Hz (2160 VPM)	31 Hz (1680 VPM)	41 Hz (2460 VPM)	41 Hz (2460 VPM)	41 Hz (2460 VPM)
FREQUENCY ACE MIN./MAX.	–	–	–	–	–
AMPLITUDE I	1.8 mm (0.07 in)	1.8 mm (0.07 in)	1.7 mm (0.067 in)	1.7 mm (0.067 in)	1.85 mm (0.073 in)
AMPLITUDE II	–	–	0.86 mm (0.034 in)	0.86 mm (0.034 in)	0.91 mm (0.036 in)
AMPLITUDE ACE MIN./MAX.	–	–	–	–	–
CENTRIFUGAL FORCE I	85 kN	100 kN	145 kN	145 kN	160 kN
CENTRIFUGAL FORCE II	–	–	130 kN	130 kN	145 kN
CENTRIF. FORCE ACE MIN./MAX.	–	–	–	–	–
ENGINE					
MANUFACTURER	Kubota V2203 M	Kubota V2203 M	Cummins QSB 3.3-C99	Deutz TCD3.6 L4	Cummins QSB 3.3-C99
POWER ACCORDING TO ISO 3046-1	35.9 kW (48 HP)	49.8 kW (67 HP)	74 kW (99 HP)	55.4 kW (75 HP)	74 kW (99 HP)
MAXIMUM TORQUE	143.2/1600 Nm/rpm	211/1600 Nm/rpm	412/1600 Nm/rpm	390/1300 Nm/rpm	412/1600 Nm/rpm
ENGINE COMPLIES WITH EMISSION REGULATIONS	EU Stage IIIA, U.S. EPA Tier 4i	EU Stage IIIA, U.S. EPA Tier 4i	EU Stage IIIA, U.S. EPA Tier 3	EU Stage IIIB, U.S. EPA Tier 4f	EU Stage IIIA, U.S. EPA Tier 3
WEIGHT & OPERATING CHARACTERISTICS					
OPERATING WEIGHT	4100 kg (9040 lb)	4500 kg (9920 lb)	7090 kg (15 630 lb)	7090 kg (15 630 lb)	8770 kg (19 330 lb)
MAXIMUM WEIGHT	4470 kg (9850 lb)	5000 kg (11 020 lb)	8120 kg (17 900 lb)	8120 kg (17 900 lb)	9380 kg (20 680 lb)
STATIC LINEAR LOAD	–	–	–	–	–
MAX. TRANSPORT SPEED	4.2 km/h (2.6 MPH)	7.5 km/h (4.7 MPH)	11.1 km/h (6.9 MPH)	11.1 km/h (6.9 MPH)	11.1 km/h (6.9 MPH)
MAX. WORKING SPEED	–	–	4.8 km/h (3 MPH)	4.8 km/h (3 MPH)	4.8 km/h (2.98 MPH)
CLIMBING ABILITY	40 %	40 %	45 %	45 %	45 %
TURNING RADIUS INNER (EDGE)	2700 mm (106.3 in)	3600 mm (141.7 in)	3090 mm (121.7 in)	3200 mm (126 in)	3090 mm (121.7 in)

SPECIFICATIONS

ASC SINGLE DRUM ROLLERS
SMOOTH DRUM

	ASC 100	ASC 110	ASC 110	ASC 120	ASC 130	ASC 130
	Tier 1	Tier 3	Tier 4i	Tier 1	Tier 3	Tier 4i
MISCELLANEOUS						
BRAKES OPERATING	Hydrostatic	Hydrostatic	Hydrostatic	Hydrostatic	Hydrostatic	Hydrostatic
BRAKES PARKING	Multiple-disc spring brake	Multiple-disc spring brake	Multiple-disc spring brake	Multiple-disc spring brake	Multiple-disc spring brake	Multiple-disc spring brake
BRAKES EMERGENCY	Multiple-disc spring brake	Multiple-disc spring brake	Multiple-disc spring brake	Multiple-disc spring brake	Multiple-disc spring brake	Multiple-disc spring brake
FUEL TANK CAPACITY	410 l (108.3 gal)	410 l (108.3 gal)	350 l (92.5 gal)	410 l (108.3 gal)	410 l (108.3 gal)	350 l (92.5 gal)
VOLTAGE	24 V	24 V	24 V	24 V	24 V	24 V
COMPACTION FORCES						
FREQUENCY I	32 Hz (1920 VPM)	32 Hz (1920 VPM)	32 Hz (1920 VPM)	32 Hz (1920 VPM)	30 Hz (1800 VPM)	32 Hz (1920 VPM)
FREQUENCY II	35 Hz (2100 VPM)	35 Hz (2100 VPM)	35 Hz (2100 VPM)	35 Hz (2100 VPM)	36 Hz (2160 VPM)	35 Hz (2100 VPM)
FREQUENCY ACE MIN./MAX.	–	23 Hz (1380 VPM) / 35 Hz (2100 VPM)	23 Hz (1380 VPM) / 35 Hz (2100 VPM)	–	–	–
AMPLITUDE I	1.85 mm (0.073 in)	1.15 mm (0.045 in)	1.15 mm (0.045 in)	1.65 mm (0.065 in)	1.9 mm (0.075 in)	1.15 mm (0.045 in)
AMPLITUDE II	1.15 mm (0.045 in)	1.85 mm (0.073 in)	1.85 mm (0.073 in)	0.95 mm (0.037 in)	1.05 mm (0.041 in)	1.86 mm (0.073 in)
AMPLITUDE ACE MIN./MAX.	–	0 mm (0 in) / 2.5 mm (0.098 in)	0 mm (0 in) / 2.5 mm (0.098 in)	–	–	–
CENTRIFUGAL FORCE I	277 kN	206 kN	206 kN	277 kN	300 kN	206 kN
CENTRIFUGAL FORCE II	206 kN	277 kN	277 kN	206 kN	230 kN	277 kN
CENTRIF. FORCE ACE MIN./MAX.	–	0 kN / 280 kN	0 / 280 kN	–	–	–
ENGINE						
MANUFACTURER	Cummins 4BTA 3.9-C116	Cummins QSB 4.5-C160	Cummins QSB 4.5-C160	Cummins 4BTA 3.9-C116	Cummins QSB 4.5-C160	Cummins QSB 4.5-C160
POWER ACCORDING TO ISO 3046-1	86 kW (115 HP)	119 kW (160 HP)	119 kW (160 HP)	86 kW (115 HP)	119 kW (160 HP)	119 kW (160 HP)
MAXIMUM TORQUE	423/1500 Nm/rpm	624/1500 Nm/rpm	624/1500 Nm/rpm	423/1500 Nm/rpm	624/1500 Nm/rpm	624/1500 Nm/rpm
ENGINE COMPLIES WITH EMISSION REGULATIONS	EU Stage I, U.S. EPA Tier 1	EU Stage IIIA, U.S. EPA Tier 3	EU Stage IIIB, U.S. EPA Tier 4i	EU Stage I, U.S. EPA Tier 1	EU Stage IIIA, U.S. EPA Tier 3	EU Stage IIIB, U.S. EPA Tier 4i
WEIGHT & OPERATING CHARACTERISTICS						
OPERATING WEIGHT	10 120 kg (22 310 lb)	11 490 kg (25 330 lb)	11 570 kg (25 510 lb)	11 500 kg (25 350 lb)	12 510 kg (27 580 lb)	12 620 kg (27 820 lb)
MAXIMUM WEIGHT	11 990 kg (26 430 lb)	15 370 kg (33 890 lb)	15 430 kg (34 020 lb)	13 370 kg (29 480 lb)	16 390 kg (36 130 lb)	16 480 kg (36 330 lb)
STATIC LINEAR LOAD	24.9 kg/cm (139.4 lb/in)	34.5 kg/cm (193.2 lb/in)	33.4 kg/cm (187 lb/in)	29.8 kg/cm (166.9 lb/in)	39.1 kg/cm (219 lb/in)	38.7 kg/cm (216.7 lb/in)
MAX. TRANSPORT SPEED	10.3 km/h (6.4 MPH)	12.8 km/h (8 MPH)	12.5 km/h (7.8 MPH)	10.3 km/h (6.4 MPH)	13 km/h (8.08 MPH)	12.5 km/h (7.8 MPH)
MAX. WORKING SPEED	7.1 km/h (4.4 MPH)	5.6 km/h (3.5 MPH)	5.7 km/h (3.5 MPH)	7.1 km/h (4.4 MPH)	5.6 km/h (3.48 MPH)	5.7 km/h (3.5 MPH)
CLIMBING ABILITY	40 %	45 %	45 %	40 %	45 %	45 %
TURNING RADIUS INNER (EDGE)	3210 mm (126.4 in)	3050 mm (120.1 in)	3630 mm (142.9 in)	3210 mm (126.4 in)	3050 mm (120.1 in)	3630 mm (142.9 in)

ASC SINGLE DRUM ROLLERS
PADFOOT DRUM

	ASC 100	ASC 110	ASC 110	ASC 120	ASC 130	ASC 130
	Tier 1	Tier 3	Tier 4i	Tier 1	Tier 3	Tier 4i
MISCELLANEOUS						
BRAKES OPERATING	Hydrostatic	Hydrostatic	Hydrostatic	Hydrostatic	Hydrostatic	Hydrostatic
BRAKES PARKING	Multiple-disc spring brake	Multiple-disc spring brake	Multiple-disc spring brake	Multiple-disc spring brake	Multiple-disc spring brake	Multiple-disc spring brake
BRAKES EMERGENCY	Multiple-disc spring brake	Multiple-disc spring brake	Multiple-disc spring brake	Multiple-disc spring brake	Multiple-disc spring brake	Multiple-disc spring brake
FUEL TANK CAPACITY	410 l (108.3 gal)	410 l (108.3 gal)	350 l (92.5 gal)	410 l (108.3 gal)	410 l (108.3 gal)	350 l (92.5 gal)
VOLTAGE	24 V	24 V	24 V	24 V	24 V	24 V
COMPACTION FORCES						
FREQUENCY I	32 Hz (1920 VPM)	31 Hz (1860 VPM)	31 Hz (1860 VPM)	32 Hz (1920 VPM)	30 Hz (1800 VPM)	31 Hz (1860 VPM)
FREQUENCY II	35 Hz (2100 VPM)	35 Hz (2100 VPM)	35 Hz (2100 VPM)	35 Hz (2100 VPM)	36 Hz (2160 VPM)	35 Hz (2100 VPM)
FREQUENCY ACE MIN./MAX.	–	23 Hz (1380 VPM) / 35 Hz (2100 VPM)	23 Hz (1380 VPM) / 35 Hz (2100 VPM)	–	–	–
AMPLITUDE I	1.6 mm (0.063 in)	1.1 mm (0.043 in)	1.1 mm (0.043 in)	1.55 mm (0.061 in)	1.85 mm (0.073 in)	1.1 mm (0.043 in)
AMPLITUDE II	0.97 mm (0.038 in)	2 mm (0.079 in)	2 mm (0.079 in)	0.9 mm (0.035 in)	1 mm (0.039 in)	2 mm (0.079 in)
AMPLITUDE ACE MIN./MAX.	–	0 mm (0 in) / 2.5 mm (0.098 in)	0 mm (0 in) / 2.5 mm (0.098 in)	–	–	–
CENTRIFUGAL FORCE I	277 kN	220 kN	220 kN	277 kN	300 kN	220 kN
CENTRIFUGAL FORCE II	206 kN	277 kN	315 kN	206 kN	230 kN	315 kN
CENTRIF. FORCE ACE MIN./MAX.	–	0 kN / 280 kN	0 / 280 kN	–	–	–
ENGINE						
MANUFACTURER	Cummins 4BTA 3.9-C116	Cummins QSB 4.5-C160	Cummins QSB 4.5-C160	Cummins 4BTA 3.9-C116	Cummins QSB 4.5-C160	Cummins QSB 4.5-C160
POWER ACCORDING TO ISO 3046-1	86 kW (115 HP)	119 kW (160 HP)	119 kW (160 HP)	86 kW (115 HP)	119 kW (160 HP)	119 kW (160 HP)
MAXIMUM TORQUE	423/1500 Nm/rpm	624/1500 Nm/rpm	624/1500 Nm/rpm	423/1500 Nm/rpm	624/1500 Nm/rpm	624/1500 Nm/rpm
ENGINE COMPLIES WITH EMISSION REGULATIONS	EU Stage I, U.S. EPA Tier 1	EU Stage IIIA, U.S. EPA Tier 3	EU Stage IIIB, U.S. EPA Tier 4i	EU Stage I, U.S. EPA Tier 1	EU Stage IIIA, U.S. EPA Tier 3	EU Stage IIIB, U.S. EPA Tier 4i
WEIGHT & OPERATING CHARACTERISTICS						
OPERATING WEIGHT	10 860 kg (23 940 lb)	12 100 kg (26 680 lb)	12 180 kg (26 850 lb)	12 060 kg (26 590 lb)	12 740 kg (28 090 lb)	12 840 kg (28 310 lb)
MAXIMUM WEIGHT	11 030 kg (24 320 lb)	14 280 kg (31 480 lb)	14 340 kg (31 610 lb)	12 230 kg (26 960 lb)	14 920 kg (32 890 lb)	15 000 kg (33 070 lb)
STATIC LINEAR LOAD	–	–	–	–	–	–
MAX. TRANSPORT SPEED	10.3 km/h (6.4 MPH)	12.8 km/h (8 MPH)	12.5 km/h (7.8 MPH)	10.3 km/h (6.4 MPH)	12.8 km/h (7.95 MPH)	12.5 km/h (7.8 MPH)
MAX. WORKING SPEED	7.1 km/h (4.4 MPH)	5.6 km/h (3.5 MPH)	5.7 km/h (3.5 MPH)	7.1 km/h (4.4 MPH)	5.6 km/h (3.48 MPH)	5.7 km/h (3.5 MPH)
CLIMBING ABILITY	40 %	45 %	45 %	40 %	45 %	45 %
TURNING RADIUS INNER (EDGE)	3210 mm (126.4 in)	3050 mm (120.1 in)	3630 mm (142.9 in)	3210 mm (126.4 in)	3050 mm (120.1 in)	3630 mm (142.9 in)

SPECIFICATIONS

ASC SINGLE DRUM ROLLERS
SMOOTH DRUM

	ASC 150	ASC 150	ASC 170	ASC 170	ASC 200	ASC 250
	Tier 3	Tier 4i	Tier 3	Tier 4i	Tier 3	Tier 3
MISCELLANEOUS						
BRAKES OPERATING	Hydrostatic	Hydrostatic	Hydrostatic	Hydrostatic	Hydrostatic	Hydrostatic
BRAKES PARKING	Multiple-disc spring brake	Multiple-disc spring brake	Multiple-disc spring brake	Multiple-disc spring brake	Multiple-disc spring brake	Multiple-disc spring brake
BRAKES EMERGENCY	Multiple-disc spring brake	Multiple-disc spring brake	Multiple-disc spring brake	Multiple-disc spring brake	Multiple-disc spring brake	Multiple-disc spring brake
FUEL TANK CAPACITY	410 l (108.3 gal)	350 l (92.5 gal)	410 l (108.3 gal)	350 l (92.5 gal)	405 l (106.99 gal)	405 l (106.99 gal)
VOLTAGE	24 V	24 V	24 V	24 V	24 V	24 V
COMPACTION FORCES						
FREQUENCY I	29 Hz (1740 VPM)	29 Hz (1740 VPM)	28 Hz (1680 VPM)	28 Hz (1680 VPM)	28 Hz (1680 VPM)	28 Hz (1680 VPM)
FREQUENCY II	35 Hz (2100 VPM)	35 Hz (2100 VPM)	35 Hz (2100 VPM)	35 Hz (2100 VPM)	34 Hz (2040 VPM)	34 Hz (2040 VPM)
FREQUENCY ACE MIN./MAX.	23 Hz (13 800 VPM) / 35 Hz (2100 VPM)	–	–	–	–	–
AMPLITUDE I	2 mm (0.079 in)	2 mm (0.079 in)	2.2 mm (0.087 in)	2.2 mm (0.087 in)	2 mm (0.079 in)	2.2 mm (0.087 in)
AMPLITUDE II	1 mm (0.039 in)	1 mm (0.039 in)	1.2 mm (0.047 in)	1.1 mm (0.043 in)	1 mm (0.039 in)	1.1 mm (0.043 in)
AMPLITUDE ACE MIN./MAX.	– / 2.5 mm (0.098 in)	–	–	–	–	–
CENTRIFUGAL FORCE I	325 kN	335 kN	335 kN	335 kN	400 kN	460 kN
CENTRIFUGAL FORCE II	237 kN	237 kN	260 kN	260 kN	300 kN	340 kN
CENTRIF. FORCE ACE MIN./MAX.	– / 388/26 Hz	–	–	–	–	–
ENGINE						
MANUFACTURER	Cummins QSB 4.5-C160	Cummins QSB 4.5-C160	Cummins QSB 4.5-C160	Cummins QSB 4.5-C160	Cummins QSB 6.7-C220	Cummins QSB 6.7-C220
POWER ACCORDING TO ISO 3046-1	119 kW (160 HP)	119 kW (160 HP)	119 kW (160 HP)	119 kW (160 HP)	164 kW (220 HP)	164 kW (220 HP)
MAXIMUM TORQUE	624/1500 Nm/rpm	624/1500 Nm/rpm	624/1500 Nm/rpm	624/1500 Nm/rpm	949/1500 Nm/rpm	949/1500 Nm/rpm
ENGINE COMPLIES WITH EMISSION REGULATIONS	EU Stage IIIA, U.S. EPA Tier 3	EU Stage IIIB, U.S. EPA Tier 4i	EU Stage IIIA, U.S. EPA Tier 3	EU Stage IIIB, U.S. EPA Tier 4i	EU Stage IIIA, U.S. EPA Tier 3	EU Stage IIIA, U.S. EPA Tier 3
WEIGHT & OPERATING CHARACTERISTICS						
OPERATING WEIGHT	14 580 kg (32 140 lb)	14 580 kg (32 140 lb)	16 270 kg (35 870 lb)	16 000 kg (35 270 lb)	20 710 kg (45 660 lb)	25 330 kg (55 840 lb)
MAXIMUM WEIGHT	18 460 kg (40 700 lb)	18 440 kg (40 650 lb)	18 140 kg (39 990 lb)	17 850 kg (39 350 lb)	25 790 kg (56 860 lb)	29 210 kg (64 400 lb)
STATIC LINEAR LOAD	48.7 kg/cm (272.7 lb/in)	47.5 kg/cm (266 lb/in)	51.9 kg/cm (290.6 lb/in)	50.5 kg/cm (282.8 lb/in)	63.2 kg/cm (353.9 lb/in)	78.4 kg/cm (439 lb/in)
MAX. TRANSPORT SPEED	10 km/h (6.21 MPH)	10 km/h (6.21 MPH)	10 km/h (6.21 MPH)	10 km/h (6.21 MPH)	12.2 km/h (7.58 MPH)	9.5 km/h (5.9 MPH)
MAX. WORKING SPEED	4.5 km/h (2.8 MPH)	4.5 km/h (2.8 MPH)	4.5 km/h (2.8 MPH)	4.5 km/h (2.8 MPH)	3.8 km/h (2.36 MPH)	3.5 km/h (2.17 MPH)
CLIMBING ABILITY	45 %	45 %	30 %	53 %	–	45 %
TURNING RADIUS INNER (EDGE)	3715 mm (146.3 in)	3715 mm (146.3 in)	3715 mm (146.3 in)	3715 mm (146.3 in)	3900 mm (153.5 in)	3815 mm (150.2 in)

ASC SINGLE DRUM ROLLERS
PADFOOT DRUM

	ASC 150	ASC 150	ASC 170	ASC 170	ASC 200	ASC 250
	Tier 3	Tier 4i	Tier 3	Tier 4i	Tier 3	Tier 3
MISCELLANEOUS						
BRAKES OPERATING	Hydrostatic	Hydrostatic	Hydrostatic	Hydrostatic	Hydrostatic	Hydrostatic
BRAKES PARKING	Multiple-disc spring brake	Multiple-disc spring brake	Multiple-disc spring brake	Multiple-disc spring brake	Multiple-disc spring brake	Multiple-disc spring brake
BRAKES EMERGENCY	Multiple-disc spring brake	Multiple-disc spring brake	Multiple-disc spring brake	Multiple-disc spring brake	Multiple-disc spring brake	Multiple-disc spring brake
FUEL TANK CAPACITY	410 l (108.3 gal)	350 l (92.5 gal)	410 l (108.3 gal)	350 l (92.5 gal)	405 l (106.99 gal)	405 l (106.99 gal)
VOLTAGE	24 V	24 V	24 V	24 V	24 V	24 V
COMPACTION FORCES						
FREQUENCY I	29 Hz (1740 VPM)	29 Hz (1740 VPM)	28 Hz (1680 VPM)	28 Hz (1680 VPM)	28 Hz (1680 VPM)	28 Hz (1680 VPM)
FREQUENCY II	35 Hz (2100 VPM)	35 Hz (2100 VPM)	35 Hz (2100 VPM)	35 Hz (2100 VPM)	34 Hz (2040 VPM)	34 Hz (2040 VPM)
FREQUENCY ACE MIN./MAX.	23 Hz (13 800 VPM) / 35 Hz (2100 VPM)	–	–	–	–	–
AMPLITUDE I	2 mm (0.079 in)	2 mm (0.079 in)	2.2 mm (0.087 in)	2.2 mm (0.087 in)	2 mm (0.079 in)	2.2 mm (0.087 in)
AMPLITUDE II	1 mm (0.039 in)	1 mm (0.039 in)	1.1 mm (0.043 in)	1.1 mm (0.043 in)	1 mm (0.039 in)	1.1 mm (0.043 in)
AMPLITUDE ACE MIN./MAX.	– / 2.5 mm (0.098 in)	–	–	–	–	–
CENTRIFUGAL FORCE I	325 kN	335 kN	335 kN	335 kN	400 kN	460 kN
CENTRIFUGAL FORCE II	236 kN	236 kN	260 kN	260 kN	300 kN	340 kN
CENTRIF. FORCE ACE MIN./MAX.	– / 388/26 Hz	–	–	–	–	–
ENGINE						
MANUFACTURER	Cummins QSB 4.5-C160	Cummins QSB 4.5-C160	Cummins QSB 4.5-C160	Cummins QSB 4.5-C160	Cummins QSB 6.7-C220	Cummins QSB 6.7-C220
POWER ACCORDING TO ISO 3046-1	119 kW (160 HP)	119 kW (160 HP)	119 kW (160 HP)	119 kW (160 HP)	164 kW (220 HP)	164 kW (220 HP)
MAXIMUM TORQUE	624/1500 Nm/rpm	624/1500 Nm/rpm	624/1500 Nm/rpm	624/1500 Nm/rpm	949/1500 Nm/rpm	949/1500 Nm/rpm
ENGINE COMPLIES WITH EMISSION REGULATIONS	EU Stage IIIA, U.S. EPA Tier 3	EU Stage IIIB, U.S. EPA Tier 4i	EU Stage IIIA, U.S. EPA Tier 3	EU Stage IIIB, U.S. EPA Tier 4i	EU Stage IIIA, U.S. EPA Tier 3	EU Stage IIIA, U.S. EPA Tier 3
WEIGHT & OPERATING CHARACTERISTICS						
OPERATING WEIGHT	14 490 kg (31 940 lb)	14 490 kg (31 940 lb)	16 170 kg (35 650 lb)	15 900 kg (35 050 lb)	20 780 kg (45 810 lb)	25 520 kg (56 260 lb)
MAXIMUM WEIGHT	16 670 kg (36 750 lb)	16 650 kg (36 710 lb)	17 190 kg (37 900 lb)	16 860 kg (37 170 lb)	23 230 kg (51 210 lb)	26 770 kg (59 020 lb)
STATIC LINEAR LOAD	–	–	–	–	–	–
MAX. TRANSPORT SPEED	10.1 km/h (6.28 MPH)	10.1 km/h (6.28 MPH)	10.1 km/h (6.28 MPH)	10.1 km/h (6.28 MPH)	12.2 km/h (7.58 MPH)	9.5 km/h (5.9 MPH)
MAX. WORKING SPEED	4.6 km/h (2.86 MPH)	4.6 km/h (2.86 MPH)	4.6 km/h (2.86 MPH)	4.6 km/h (2.86 MPH)	3.9 km/h (2.42 MPH)	3.6 km/h (2.24 MPH)
CLIMBING ABILITY	45 %	45 %	30 %	50 %	–	50 %
TURNING RADIUS INNER (EDGE)	3715 mm (146.3 in)	3715 mm (146.3 in)	3715 mm (146.3 in)	3715 mm (146.3 in)	3900 mm (153.5 in)	3815 mm (150.2 in)

SPECIFICATIONS

ARS SINGLE DRUM ROLLERS
SMOOTH DRUM

	ARS 200	**ARS 200**	**ARS 220**	**ASC 220**
	Tier 3	Tier 4f	Tier 3	Tier 4f
MISCELLANEOUS				
BRAKES OPERATING	Hydrostatic	Hydrostatic	Hydrostatic	Hydrostatic
BRAKES PARKING	Multiple-disc spring brake	Multiple-disc spring brake	Multiple-disc spring brake	Multiple-disc spring brake
BRAKES EMERGENCY	Multiple-disc spring brake	Multiple-disc spring brake	Multiple-disc spring brake	Multiple-disc spring brake
FUEL TANK CAPACITY	350 l (92,46 gal)	350 l (92,46 gal)	350 l (92,46 gal)	350 l (92,46 gal)
VOLTAGE	24 V	24 V	24 V	24 V
COMPACTION FORCES				
FREQUENCY I	34 Hz (2040 VPM)	34 Hz (2040 VPM)	34 Hz (2040 VPM)	34 Hz (2040 VPM)
FREQUENCY II	27 Hz (1620 VPM)	27 Hz (1620 VPM)	27 Hz (1620 VPM)	27 Hz (1620 VPM)
FREQUENCY ACE MIN./MAX.	–	–	–	–
AMPLITUDE I	1 mm (0,039 in)	1 mm (0,039 in)	1 mm (0,039 in)	1 mm (0,039 in)
AMPLITUDE II	2 mm (0,079 in)	2 mm (0,079 in)	2 mm (0,079 in)	2 mm (0,079 in)
AMPLITUDE ACE MIN./MAX.	–	–	–	–
CENTRIFUGAL FORCE I	300 kN	300 kN	300 kN	300 kN
CENTRIFUGAL FORCE II	375 kN	375 kN	375 kN	375 kN
CENTRIF. FORCE ACE MIN./MAX.	–	–	–	–
ENGINE				
MANUFACTURER	DEUTZ TCD 6.1 L6	DEUTZ TCD 6.1 L6	DEUTZ TCD 6.1 L6	DEUTZ TCD 6.1 L6
POWER ACCORDING TO ISO 3046-1	160 kW (215 HP)/2300 rpm	160 kW (215 HP)/2200 rpm	160 kW (215 HP)/2300 rpm	160 kW (215 HP)/2200 rpm
MAXIMUM TORQUE	694/1600 Nm/rpm	694/1600 Nm/rpm	694/1600 Nm/rpm	694/1600 Nm/rpm
ENGINE COMPLIES WITH EMISSION REGULATIONS	EU Stage IIIA, U.S. EPA Tier 3	EU Stage IV, U.S. EPA Tier 4f	EU Stage IIIA, U.S. EPA Tier 3	EU Stage IV, U.S. EPA Tier 4f
WEIGHT & OPERATING CHARACTERISTICS				
OPERATING WEIGHT	19750 kg (43541,3 lb)	19750 kg (43541,3 lb)	21630 kg (47690 lb)	21930 kg (48350 lb)
MAXIMUM WEIGHT	26000 kg (57320,2 lb)	26000 kg (57320,2 lb)	26000 kg (57320,2 lb)	26000 kg (57320,2 lb)
STATIC LINEAR LOAD	58,6 kg/cm (327,9 lb/in)	58,6 kg/cm (327,9 lb/in)	66,9 kg/cm (374.6 lb/in)	66,9 kg/cm (374.6 lb/in)
MAX. TRANSPORT SPEED	12 km/h (7,46) mph)	12 km/h (7,46) mph)	12 km/h (7,46) mph)	12 km/h (7,46) mph)
MAX. WORKING SPEED	7 km/h (4,35 mph)	7 km/h (4,35 mph)	7 km/h (4,35 mph)	7 km/h (4,35 mph)
CLIMBING ABILITY	55(50)%	55(50)%	55(50)%	55(50)%
TURNING RADIUS INNER (EDGE)	4370 mm (172 in)	4370 mm (172 in)	4370 mm (172 in)	4370 mm (172 in)

ARS SINGLE DRUM ROLLERS
PADFOOT DRUM

	ARS 200	**ARS 200**	**ARS 220**	**ARS 220**
	Tier 3	Tier 4f	Tier 3	Tier 4f
MISCELLANEOUS				
BRAKES OPERATING	Hydrostatic	Hydrostatic	Hydrostatic	Hydrostatic
BRAKES PARKING	Multiple-disc spring brake	Multiple-disc spring brake	Multiple-disc spring brake	Multiple-disc spring brake
BRAKES EMERGENCY	Multiple-disc spring brake	Multiple-disc spring brake	Multiple-disc spring brake	Multiple-disc spring brake
FUEL TANK CAPACITY	350 l (92,46 gal)	350 l (92,46 gal)	350 l (92,46 gal)	350 l (92,46 gal)
VOLTAGE	24 V	24 V	24 V	24 V
COMPACTION FORCES				
FREQUENCY I	34 Hz (2040 VPM)	34 Hz (2040 VPM)	34 Hz (2040 VPM)	34 Hz (2040 VPM)
FREQUENCY II	27 Hz (1620 VPM)	27 Hz (1620 VPM)	27 Hz (1620 VPM)	27 Hz (1620 VPM)
FREQUENCY ACE MIN./MAX.	–	–	–	–
AMPLITUDE I	1 mm (0,039 in)	1 mm (0,039 in)	1 mm (0,039 in)	1 mm (0,039 in)
AMPLITUDE II	2 mm (0,079 in)	2 mm (0,079 in)	2 mm (0,079 in)	2 mm (0,079 in)
AMPLITUDE ACE MIN./MAX.	–	–	–	–
CENTRIFUGAL FORCE I	300 kN	300 kN	300 kN	300 kN
CENTRIFUGAL FORCE II	375 kN	375 kN	375 kN	375 kN
CENTRIF. FORCE ACE MIN./MAX.	–	–	–	–
ENGINE				
MANUFACTURER	DEUTZ TCD 6.1 L6	DEUTZ TCD 6.1 L6	DEUTZ TCD 6.1 L6	DEUTZ TCD 6.1 L6
POWER ACCORDING TO ISO 3046-1	160 kW (215 HP)/2300 rpm	160 kW (215 HP)/2200 rpm	160 kW (215 HP)/2300 rpm	160 kW (215 HP)/2200 rpm
MAXIMUM TORQUE	694/1600 Nm/rpm	694/1600 Nm/rpm	694/1600 Nm/rpm	694/1600 Nm/rpm
ENGINE COMPLIES WITH EMISSION REGULATIONS	EU Stage IIIA, U.S. EPA Tier 3	EU Stage IV, U.S. EPA Tier 4f	EU Stage IIIA, U.S. EPA Tier 3	EU Stage IV, U.S. EPA Tier 4f
WEIGHT & OPERATING CHARACTERISTICS				
OPERATING WEIGHT	19 875 kg (43817 lb)	19 875 kg (43817 lb)	21760 kg (47970 lb)	22060 kg (48630 lb)
MAXIMUM WEIGHT	26000 kg (57320,2 lb)	26000 kg (57320,2 lb)	26000 kg (57320,2 lb)	26000 kg (57320,2 lb)
STATIC LINEAR LOAD	–	–	–	–
MAX. TRANSPORT SPEED	12 km/h (7,46) mph)	12 km/h (7,46) mph)	12 km/h (7,46) mph)	12 km/h (7,46) mph)
MAX. WORKING SPEED	7 km/h (4,35 mph)	7 km/h (4,35 mph)	7 km/h (4,35 mph)	7 km/h (4,35 mph)
CLIMBING ABILITY	55(50)%	55(50)%	55(50)%	55(50)%
TURNING RADIUS INNER (EDGE)	4370 mm (172 in)	4370 mm (172 in)	4370 mm (172 in)	4370 mm (172 in)

TRAINING

ENHANCE YOUR PERFORMANCE

The Ammann International Training Centre in the Czech Republic is our training headquarters. If you are not able to visit the International Training Centre, Ammann will bring the training to your business or even a jobsite of your choosing.

MACHINE TRAINING MODULES

Modules help you organise your team's training efforts. For example, you can have comprehensive lessons that put you on the path to expertise regarding a single machine. Or, if you prefer, your crew can instead broaden its general knowledge. And if you want to become an expert on the entire product line, the modules can accommodate that, too.

MAIN COURSES

These are the most frequently requested lessons and focus on one machine line.

SUB COURSES

These courses focus on a single machine and typically run for 2 days, allowing a second (or even third) such course to be taken during a week at the training centre.

PRODUCT COURSES

Important information regarding Ammann compaction machines is at the core of these classes. The training includes correct operation and basic maintenance.

ADMINISTRATIVE COURSES

Participants in this training learn effective utilisation of warranty claims, spare parts purchase orders, training, requests for technical support and service tips. Those who take these classes will learn to use all Ammann technical publications and administration tools.

COMMISSIONING COURSES

In this training, participants learn maintenance and proper methods for organising a commissioning of Ammann compactors and asphalt pavers.

INTELLIGENT COMPACTION COURSES

Participants learn about the ACE^{force}, ACE^{pro} and ACE^{plus} systems used in Ammann machines. Those who take the class will learn to properly operate, maintain, diagnose and repair ACE systems. The offerings include ACE System for Soil Compactors, which is focused on ASC rollers, and ACE System for Asphalt Compactors, which discusses systems on ARP 95, ARX 90 and ARX 110.

SERVICE

A NETWORK TO SUPPORT YOU

No matter where you are, Ammann-trained technicians and parts are nearby. Ammann dealers provide well-trained service technicians who can help you, whether it's an emergency or time for preventive maintenance. The vast Ammann network ensures there is a nearby technician who understands your language and your technical needs. Parts availability and ease of ordering are always Ammann priorities.

HOTLINE SUPPORT

Ammann experts are ready to answer your technical questions 24 hours a day, seven days a week. The hotline team is highly trained and experienced. Representatives can talk you through the challenges – in various languages – to help keep your machine productive.

SERVICE APP

The service app for Ammann machines impresses machine operators who are already benefiting from the advantages of the free application. The easy-to-use app provides machine operators working on site quick and uncomplicated access to machine documentation.

SERVICE VIDEOS

Sometimes a video tells the story best. That's why you'll find a variety of service videos that walk you through service and maintenance processes.

QR CODE

Many maintenance kits feature QR codes that link to videos with helpful demonstrations that walk you or your technician through the process. The videos tell the story without dialogue so customers anywhere in the world can understand.

SPARE PARTS

You can only earn money when your equipment is working. That's why Ammann does everything possible to ensure you have the parts where and when you need them. Those efforts include easy online ordering to avoid confusion and enable tracking, and efficient logistics and availability to help parts reach you quickly.

WEARING KITS

Some machines handle abrasive materials in demanding applications. While wear is inevitable, downtime can be limited. Wearing kits make replacement of these parts efficient and cost-effective. All the necessary parts – big and small – are in a single box to keep you organised and efficient and to ensure the machines are quickly back up and running.

EMERGENCY KITS

Emergency kits prevent little frustrations from becoming bigger issues that can shut down a machine and even a jobsite. These kits include parts such as switches, fuses and valve coils that are simple and fast to change yet still can cause significant problems if not operating properly.
The kits easily fit in the trunk or bed of a vehicle so they're on hand when needed. A crew-member with a bit of technical knowledge can handle this work on the jobsite. These repairs take 2 hours or less.

MAINTENANCE KITS

Preventive maintenance is crucial to efficient operation and service life of machines. The easier the maintenance, the more likely it is to be completed. Maintenance kits make the upkeep simple. Parts associated with a particular maintenance process are in a single box with a single part number.

BROCHURE WITH ALL KITS

We have a prospect with all kits, and their part numbers are available for you. Just contact your parts consultant and have a digital or hardcopy sent to you.

"Service kits ensure that every part is there when you need it, while emergency kits prevent a little challenge from becoming a big one."

For additional product information
and services please visit:
www.ammann-group.com

Specifications are subject to change.
MPB-1502-01-EN | © Ammann Group

Images: © Ammann Group, www.fotopizza.com